Work Order ID 73331

Wednesday, August 31, 2011 11:03:07 AM

Item ID: D3912-5
Revision ID:
Item Name: Eyebolt Plate
Start Date: 9/1/2011 **Start Qty:** 16.00
Required Date: 9/15/2011 **Req'd Qty:** 16.00
Reference:

Accept

Setup **Start** **Stop**

Cust Item ID:
Customer:

Approvals: **Process Plan:** MF. **Date:** 11-09-01 **Tooling:** **Date:**
QC: **Date:** **SPC (Y/N):** **Date:**

Run **Start** **Stop**

Sequence ID/ Work Center ID	Operation Description	Set Up/ Run Hours	Tool ID	Tool #	Plan Code	Accept Qty	Reject Qty	Reject Number	Insp. Stamp
Draw Nbr	**Revision Nbr**								
D3912	B								
100		0.00							
Waterjet	**Memo**	0.00				BB 11-9-8			
FLOW CNC Waterjet 304 .125	Cut as per dwg D3912 Prog Rev: B Dwg Rev: B Deburr as required								20
110	QC2- Inspect parts off machine FAI/FAIB	0.00							
QC	**Memo**	0.00				BB 11-9-8			
Quality Control									

Dart Aerospace Ltd

W/O:		WORK ORDER CHANGES					
DATE	STEP	PROCEDURE CHANGE	By	Date	Qty	Approval Chief Eng / Prod Mgr	Approval QC Inspector

Part No: _____ **PAR #:** _____ **Fault Category:** _____ **NCR:** Yes No **DQA:** _____ **Date:** _____

Resolution: _____ **Disposition:** _____ **QA: N/C Closed:** _____ **Date:** _____

NCR:		WORK ORDER NON-CONFORMANCE (NCR)						
DATE	STEP	Description of NC Section A	Corrective Action Section B			Verification Section C	Approval Chief Eng	Approval QC Inspector
			Initial Chief Eng	Action Description Chief Eng	Sign & Date			

NOTE: Date & initial all entries

H:\fFORMS\Quality Assurance\approved QA\NCRWO RevE

Work Order ID 73331

Wednesday, August 31, 2011 11:03:07 AM

Item ID: D3912-5 **Accept** **Setup Start**

Revision ID: **Stop**

Item Name: Eyebolt Plate

Start Date: 9/1/2011 **Start Qty:** 16.00 **Cust Item ID:**

Required Date: 9/15/2011 **Req'd Qty:** 16.00 **Customer:**

Reference:

Approvals: **Process Plan:** _____ **Date:** _____ **Tooling:** _____ **Date:** _____ **Run Start**

QC: _____ **Date:** _____ **SPC (Y/N):** _____ **Date:** _____ **Stop**

Sequence ID/ Work Center ID	Operation Description	Set Up/ Run Hours	Tool ID	Tool #	Plan Code	Accept Qty	Reject Qty	Reject Number	Insp. Stamp
120	QC8- Inspect parts - second check	0.00				counted x20			
QC	Memo	0.00							
Quality Control									
130	Identify as per dwg & Stock Location: ST91	0.00				20x	SP 11-09-08		
Packaging	Memo	0.00							
Packaging									
140	QC21- Final Inspection - Work Order Release	0.00						11/9/12	
QC	Memo	0.00							
Quality Control									

11-09-08

Dart Aerospace Ltd

W/O:		WORK ORDER CHANGES					
DATE	STEP	PROCEDURE CHANGE	By	Date	Qty	Approval Chief Eng / Prod Mgr	Approval QC Inspector

Part No: _____ **PAR #:** _____ **Fault Category:** _____ **NCR:** Yes No **DQA:** _____ **Date:** _____

Resolution: _____ **Disposition:** _____ **QA: N/C Closed:** _____ **Date:** _____

NCR:		WORK ORDER NON-CONFORMANCE (NCR)						
DATE	STEP	Description of NC Section A	Corrective Action Section B			Verification Section C	Approval Chief Eng	Approval QC Inspector
			Initial Chief Eng	Action Description Chief Eng	Sign & Date			

NOTE: Date & initial all entries

H:\fFORMS\Quality Assurance\approved QA\NCRWO RevE

Picklist Print

Wednesday, August 31, 2011 11:03:04 AM

Work Order ID: 73331

Parent Item: D3912-5

Parent Item Name: Eyebolt Plate

Start Date: 9/1/2011 **Required Date:** 9/15/2011

Start Qty: 16.00 **Required Qty:** 16.00

Comments: IPP RevA: new issue DD 09.11.17 verified by:EC

Component Item ID/ Item Name	Replacement Item ID	Mfg/ Purch	Bin Item	Primary Location	Last Location	Route Seq ID	Unit of Measure	Qty on Hand	Qty per Kit	Total Qty	Qty Issued	Date Issued	Status
M304S11GA 304/316 0.125 Sheet		Purchased	No			100	sf	43.5000	0.05125	0.863158	1.8 B11-9-8		

Location	Loc Qty	Loc Code
MAT020	43.5	
117494	43.5	

117494

20

Dart Aerospace Ltd

W/O:		WORK ORDER CHANGES					
DATE	STEP	PROCEDURE CHANGE	By	Date	Qty	Approval Chief Eng / Prod Mgr	Approval QC Inspector

Part No: _____ **PAR #:** _____ **Fault Category:** _____ **NCR:** Yes No **DQA:** _____ **Date:** _____

Resolution: _____ **Disposition:** _____ **QA: N/C Closed:** _____ **Date:** _____

NCR:		WORK ORDER NON-CONFORMANCE (NCR)						
DATE	STEP	Description of NC Section A	Corrective Action Section B			Verification Section C	Approval Chief Eng	Approval QC Inspector
			Initial Chief Eng	Action Description Chief Eng	Sign & Date			

NOTE: Date & initial all entries

H:\fFORMS\Quality Assurance\approved QA\NCRWO RevE

DART AEROSPACE LTD	Work Order:	7333
Description: Eyebolt Plate	Part Number:	D3912-5
Inspection Dwg: D3912 **Rev:** B		Page 1 of 1

FIRST ARTICLE INSPECTION CHECKLIST

Drawing Dimension	Tolerance	Actual Dimension	Accept	Reject	Method of Inspection	Comments
Ø0.129	+0.005/-0.001	.130	✓		V HBD7	
Ø0.257	+0.006-0.001	.258	✓		V	
0.38	+/-0.030	.382	✓		V	
1.500	+/-0.010	1.502	✓		V	
0.500 Pitch	+/-0.010	.501	✓		V	
3.15	+/-0.030	3.15	✓		V	
0.375	+/-0.010	.376	✓		V	
0.517	+/-0.010	.517	✓		V	
1.000	+/-0.010	1.001	✓		V	
3.65	+/-0.030	3.652	✓		V	
1.500	+0.020/-0.000	1.498	✓		V	
0.25	+/-0.030	.251	✓		V	
2.00	+/-0.030	2.014	✓		V	
0.125	+/-0.010	.117	✓		V	

Measured by:	IB	Audited by:		Preliminary Approval:	
Date:	11-9-9	Date:	11/09/08	Date:	

Rev	Date	Change	Revised by	Approved
A	10.06.07	New Issue	KJ	
B	10.08.09	Dwg Rev updated	KJ	

Dart Aerospace Ltd

W/O:		WORK ORDER CHANGES					
DATE	STEP	PROCEDURE CHANGE	By	Date	Qty	Approval Chief Eng / Prod Mgr	Approval QC Inspector

Part No: _____ **PAR #:** _____ **Fault Category:** _____ **NCR:** Yes / No **DQA:** _____ **Date:** _____

Resolution: _____ **Disposition:** _____ **QA: N/C Closed:** _____ **Date:** _____

NCR:		WORK ORDER NON-CONFORMANCE (NCR)						
DATE	STEP	Description of NC Section A	Corrective Action Section B			Verification Section C	Approval Chief Eng	Approval QC Inspector
			Initial Chief Eng	Action Description Chief Eng	Sign & Date			

NOTE: Date & initial all entries

H:¥FORMS\Quality Assurance\approved QA\NCRWO RevE

ITEM	QTY -041	P/N	DESCRIPTION
	X	D3912-041	EYEBOLT RECEIVER ASSY
1	1	D3912-1	EYEBOLT
2	2	D3912-3	EYEBOLT BLOCK
3	2	D3912-5	EYEBOLT PLATE
4	1	D3801-1	SPRING PLUNGER B
5	8	MS20615-4M20	RIVET
6	1	MS21209-F615	HELICAL B
7	1	NAS1149F0332P	WASHER

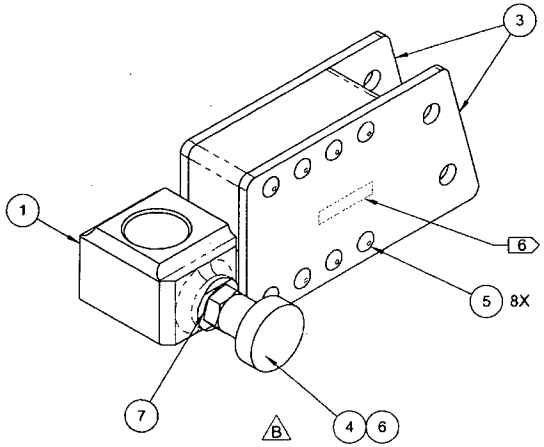

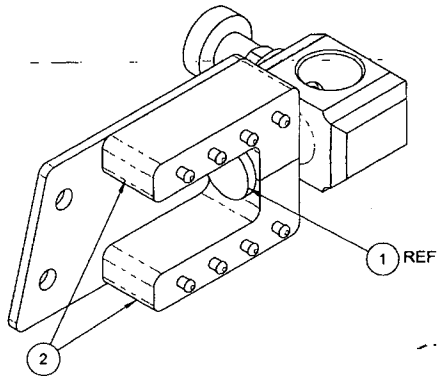

SUPPLEMENTAL ISO VIEW
(EYEBOLT PLATE REMOVED
TO SHOW INTERIOR FEATURES)

RELEASED
2010 -07- 16

73331

D3912-041 EYEBOLT RECEIVER ASSY

NOTES:
1) MATERIAL: N/A
2) FINISH: NONE
3) TOLERANCES: PER DART QSI 018 UNLESS OTHERWISE NOTED
4) UNITS: INCHES UNLESS OTHERWISE NOTED
5) BREAK SHARP EDGES: N/A
6) IDENTIFICATION: IDENTIFY WITH DART P/N D3912-041 USING FINE POINT PERMANENT INK MARKER
7) WEIGHT -041: 1.58 lbs

REV.	DESCRIPTION	BY	DATE
B	D3801-1 WAS D3810-1 SPRING PLUNGER; D4028-041 RMV; MS21209-F615 WAS MS21209-C610 HELICAL; (1) WASHER NAS1149C0663R ADDED; BOSS ADDED TO D3912-1.	JPH	10.06.28
A	NEW ISSUE	JPH	10.03.04

DESIGN	AJS	DART AEROSPACE LTD HAWKESBURY, ONTARIO, CANADA	
DRAWN			
CHECKED		DRAWING NO. D3912	REV. B
MFG. APPR.			SHEET 1 OF 3
APPROVED		TITLE EYEBOLT RECEIVER ASSY	SCALE NTS
DE APPR.			
DATE	10.06.28		

Dart Aerospace Ltd

W/O:		WORK ORDER CHANGES					
DATE	STEP	PROCEDURE CHANGE	By	Date	Qty	Approval Chief Eng / Prod Mgr	Approval QC Inspector

Part No: _____ **PAR #:** _____ **Fault Category:** _____ **NCR:** Yes No **DQA:** _____ **Date:** _____

Resolution: _____ **Disposition:** _____ **QA: N/C Closed:** _____ **Date:** _____

NCR:		WORK ORDER NON-CONFORMANCE (NCR)						
DATE	STEP	Description of NC Section A	Corrective Action Section B			Verification Section C	Approval Chief Eng	Approval QC Inspector
			Initial Chief Eng	Action Description Chief Eng	Sign & Date			

NOTE: Date & initial all entries

H:\fFORMS\Quality Assurance\approved QA\NCRWO RevE

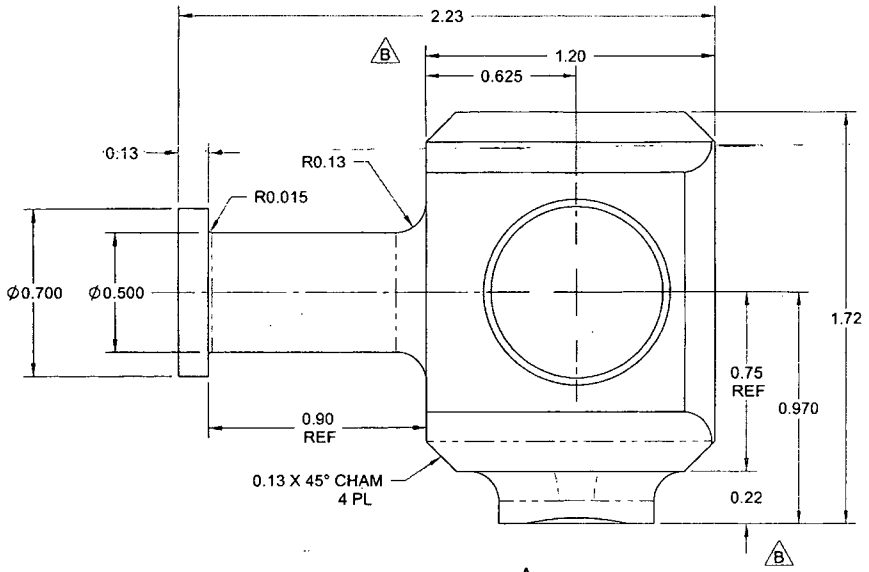

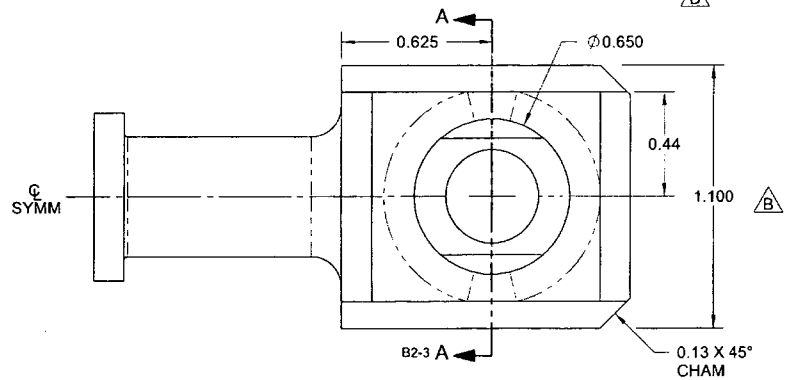

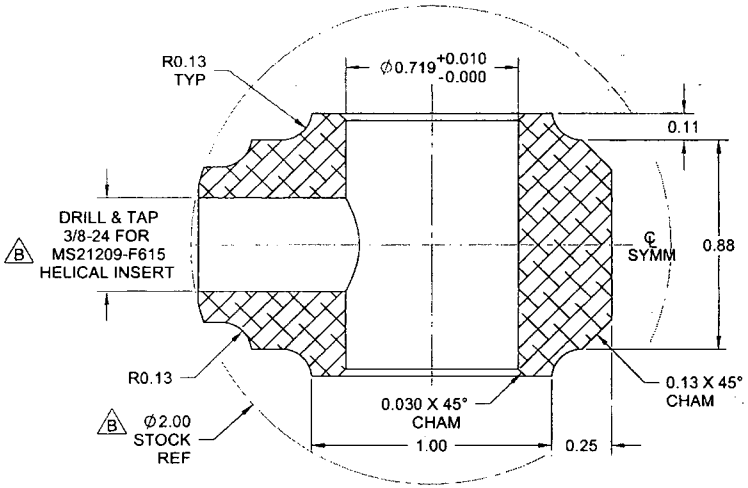

SECTION A-A B6-3

RELEASED
2010 -07- 16

73331

D3912-1 EYEBOLT

NOTES:
1) MATERIAL: 303/304/316 STAINLESS STEEL ROUND BAR, PER ASTM A276 OR ASTM A582 REF DART SPEC M303R OR M304R B
2) FINISH: NONE
3) TOLERANCES: PER DART QSI 018 UNLESS OTHERWISE NOTED
4) UNITS: INCHES UNLESS OTHERWISE NOTED
5) BREAK SHARP EDGES: 0.005 TO 0.010 MAX
6) IDENTIFICATION: ID AT ASSEMBLY
7) WEIGHT: 0.45 lbs

DESIGN	AJS	**DART AEROSPACE LTD** HAWKESBURY, ONTARIO, CANADA
DRAWN		
CHECKED		DRAWING NO. D3912 — REV. B — SHEET 2 OF 3
MFG. APPR.		
APPROVED		TITLE: EYEBOLT RECEIVER ASSY — SCALE: NTS
DE APPR.		
DATE	10.06.28	

Dart Aerospace Ltd

W/O:		WORK ORDER CHANGES					
DATE	STEP	PROCEDURE CHANGE	By	Date	Qty	Approval Chief Eng / Prod Mgr	Approval QC Inspector

Part No: _____ **PAR #:** _____ **Fault Category:** _____ **NCR:** Yes No **DQA:** _____ **Date:** _____

Resolution: _____ **Disposition:** _____ **QA: N/C Closed:** _____ **Date:** _____

NCR:		WORK ORDER NON-CONFORMANCE (NCR)						
DATE	STEP	Description of NC Section A	Corrective Action Section B			Verification Section C	Approval Chief Eng	Approval QC Inspector
			Initial Chief Eng	Action Description Chief Eng	Sign & Date			

NOTE: Date & initial all entries

H:\fFORMS\Quality Assurance\approved QA\NCRWO RevE

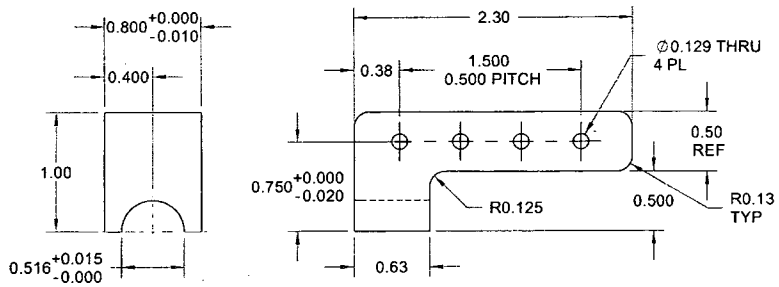

D3912-3 EYEBOLT BLOCK

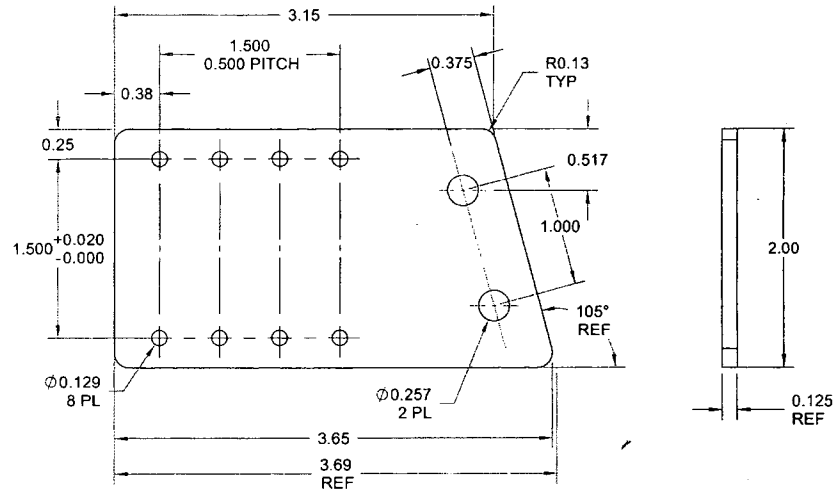

D3912-5 EYEBOLT PLATE

RELEASED
2010 -07- 16

73331

NOTES:
1) MATERIAL -3: 303/304/316 STAINLESS STEEL BAR, PER ASTM A276
REF DART SPEC M303B OR M304B

-5: 303/304/316 STAINLESS STEEL SHEET ANNEALED 2B, 0.125 THK
PER MIL-S-5059 OR AMS 5513/5524 OR ASTM A240 OR ASME 5A240
REF DART SPEC M303S11GA OR M304S11GA

2) FINISH: NONE
3) TOLERANCES: PER DART QSI 018 UNLESS OTHERWISE NOTED
4) UNITS: INCHES UNLESS OTHERWISE NOTED
5) BREAK SHARP EDGES: 0.005 TO 0.010 MAX
6) IDENTIFICATION: ID AT ASSEMBLY
7) WEIGHT -3: 0.30 lbs
-5: 0.24 lbs

DESIGN	AJS	**DART AEROSPACE LTD** HAWKESBURY, ONTARIO, CANADA
DRAWN		DRAWING NO. D3912 — REV. B — SHEET 3 OF 3
CHECKED		TITLE: EYEBOLT RECEIVER ASSY — SCALE: NTS
MFG. APPR.		
APPROVED		
DE APPR.		
DATE	10.06.28	

Dart Aerospace Ltd

W/O:		WORK ORDER CHANGES					
DATE	STEP	PROCEDURE CHANGE	By	Date	Qty	Approval Chief Eng / Prod Mgr	Approval QC Inspector

Part No: _____ **PAR #:** _____ **Fault Category:** _____ **NCR:** Yes No **DQA:** _____ **Date:** _____

Resolution: _____ **Disposition:** _____ **QA: N/C Closed:** _____ **Date:** _____

NCR:		WORK ORDER NON-CONFORMANCE (NCR)						
DATE	STEP	Description of NC Section A	Corrective Action Section B			Verification Section C	Approval Chief Eng	Approval QC Inspector
			Initial Chief Eng	Action Description Chief Eng	Sign & Date			

NOTE: Date & initial all entries

H:\fFORMS\Quality Assurance\approved QA\NCRWO RevE